ROBOTIC CHASSIS FOR ANDROID PHONES

Michal Hodon, Juraj Micek, Ondrej Karpis, Peter Sevcik

University of Zilina, Faculty of Management Science and Informatics, Department of Technical Cybernetics (SLOVAKIA)

Abstract

Different robotic platform exist on the market. Many of them serves as the stand-alone systems which provide interesting opportunities for the teaching of programming. It is always more attractive for students to "play" with something "live", what is moving and providing the real feedback. However, there are also the systems, which serve the function as chassis for primary platforms that are, on the one hand, very famous (Arduino, RPi), but lacks any kind of movement activity (motors, wheels,...). In our approach, we oriented on the big group of Android-phone users. We tried to teach the student Android programming in a kind of "funny" way. We developed the module which can transform every Android device with USB interface into the robotic system. The system can be driven through the application written and implemented in the Android phone. Through this system we tried to motivate the students to do the applications and, therefore, to teach them programming.

Keywords: Robotics, Open HW, Android, Smartphone, programming, ATmega.

1 INTRODUCTION

The mentioned approach is coming out from the idea of learning system built on modular architecture as an Open HW platform on which the students can learn the basics of electronics, computer science and computer engineering (e.g. [1], [2], [3]). Anytime, if something real, what is blinking, moving or producing sound, to sum up, providing any kind of feedback to the user is implemented into the teaching process, the interest of listeners is aroused quite significantly [1]. The motivation to control the behavior of something what is visible also for the other audience is strong enough to force the students work hard, even to learn difficult techniques in order to reach the goal of controlled education tool. In this scenario, OpenHW robotic platforms [3] play the significant role in educational process.

One examle of such a platform can be considered modular learning system Yrobot (Figure 1) [4], [5] which was developed at the Department of Technical Cybernetics, Faculty of Management and Informatics of the University of Žilina. The developed system is an Open HW platform where students can learn the basics of electronics, computer science and computer engineering. Yrobot is intended to serve as a basis for developing further expanding applications.

Unlike typical Open HW systems such as Arduino and Raspberry PI, the Yrobot system also includes a motion subsystem that provides an eye-catching way for verification of designed and implemented algorithms. The central part of Yrobot is represented by a simple 8-bit microcontroller ATmega16. Microcontroller selection is based on requirements for simplicity, availability of the development environment, and a suitable set of integrated peripherals that enable communication with the environment. Yrobot printed circuit board features four signaling LEDs, two 7-segment displays, acoustic signaling, two integrated gearboxes (1:48) and wheel turn sensing circuits based on CNY70 reflective sensors as well as front push-button sensors for obstacles detection. System power is implemented either via a 7.5V-10V DC source or via two Li-Pol 3.7V 2200mAh batteries. The Yrobot system can be programmed via an integrated USB AVR ISP programmer.

The authors of the system assumed that Yrobot will be the cornerstone of an extensive community that will direct the further development of the system by designing new expansion modules and new interesting applications. Upgraded modules can use the power source of the mobile part and can communicate with the base part through USART and SPI interface.

Figure 1. Yrobot system with an audio extension.

2 METHODOLOGY AND MOTIVATION

Though the Yrobot system proved the assumptions of the authors mentioned above, it - at the moment - does not fill the market expectations as the requirements put on the current developers in terms of the usage of actual, high-end technologies. Beside the embedded systems problematic, there exist a variety of interesting application fields, where different technologies play the significant roles, e.g. Artificial Intelligence [6], Internet-of-Things [7], Multi Agent Systems [8], …

To be able to cope with these state-of-art technologies, the educational methods/tools need to be "alive", to be able to react on the actual market demands, to prepare the ready young professionals able to work on a real problems.

Therefore, the authors of Yrobot decided, with regards to experiences gathered during almost 7 years of working with this platform, to build the reduced version of robot which can be controlled via smartphone with Android OS. The reason is to increase the students' interest in developing of applications for the huge market smart devices.

Moreover, today's mobile phones integrate many interesting subsystems, which can be in an interesting manner utilized in the development of non-traditional applications.

Interesting technical means of mobile phones can be considered as for:

- communication (Bluetooth, WiFi, LTE, NFC, USB ...);
- sensory (accelerometer, magnetometer, GPS receiver, light-intensity sensors,…);
- displaying (Touch Screen, notifications LEDs, integrated cameras,…);
- data storage (internal memory, SD card,…);
- SW modules (OpenCV, Speech API,...);
- and many other features.

Nowadays, the mobile phone is not only a communication device, but a comprehensive system providing many other services (e.g. for business, photography, data terminal, acoustic player, navigation system and many more - if we name them all we are out of space provided for this article). It can be also assumed that developments in the field of smart devices, or mobile phones, will keep continue also in the upcoming years. Therefore, it could be interesting, in a kind of funny way, to teach/show to the listeners/students the process of developing applications that can comprise almost all of the possibilities which subsystems of modern smart devices serve. With regards to our experiences, further requirement on such kind of education tool is that the developments of certain application have to be fun and thus addresses a wider range of candidates.

3 MOBILE PLATFORM - ROBOTIC CHASSIS FOR SMARTPHONES

As it was mentioned above, the design of the mobile system is based on the proven Y-Robot solution. Though it was mentioned that Android OS, due to its availability, has been chosen for application development solely, other operating systems providing USB and/or Bluetooth drivers and connection can be used too. Block schematic of the proposed system is shown in the figure below.

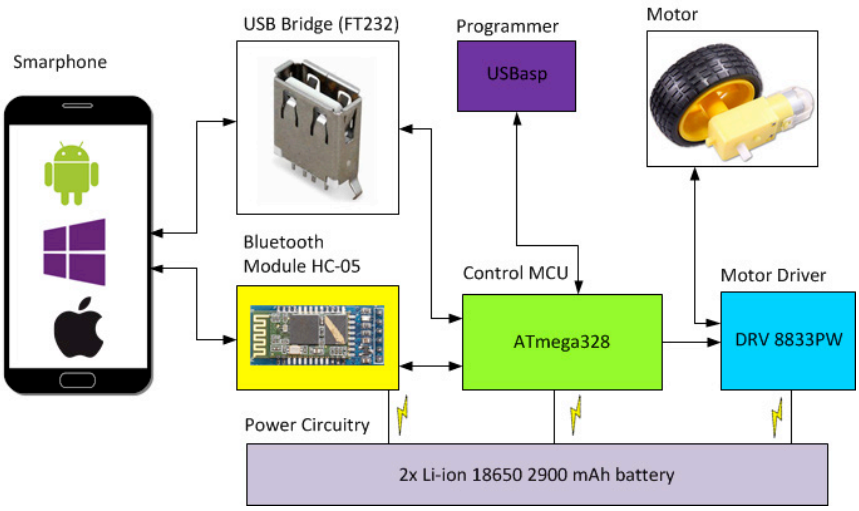

Figure 2. Block schematic of the proposed system.

As it can be seen from the figure above, two basic working modes can be set within the mobile platform (jumper connector is used for this purpose):

1. Wired functioning - The mobile phone is located directly on the platform and through the USB interface the mobile phone communicates and controls the platform movement.
2. Wireless functioning - The mobile phone communicates via Bluetooth with the mobile platform.

Because the platform is controlled via a mobile phone, there are no big demands on the performance of control unit. The task of the control MCU is just to interpret the basic commands for the motors movement and, on request, to send information about their turns as well as the information about the presence of an obstacle.

For this reason, an 8-bit MCU has been selected as the main control unit of the platform. Obviously, if there is a need for higher computing performance, it is not a problem to replace it by any other, more powerful, MCU. Currently, because of the capabilities of interconnected smartphones, authors do not see any reason to increase the performance of the platform.

As considering the exact technical design, the platform includes following main parts:

- ATmega328 microcontroller;
- FT232 USB/UART converter, alternating with HC-05 Bluetooth module;
- Dual H-bridge DRV8833 for control of two DC gear motors;
- Turns sensing circuitry based on CNY70 reflective optical sensors;
- TCRT1000 reflective sensors for obstacles detection;
- Two Lion batteries 18650 with DC/ DCconverter.
- The user button can be used for another feedback functions.

The system schematic is provided in the Figure 3.

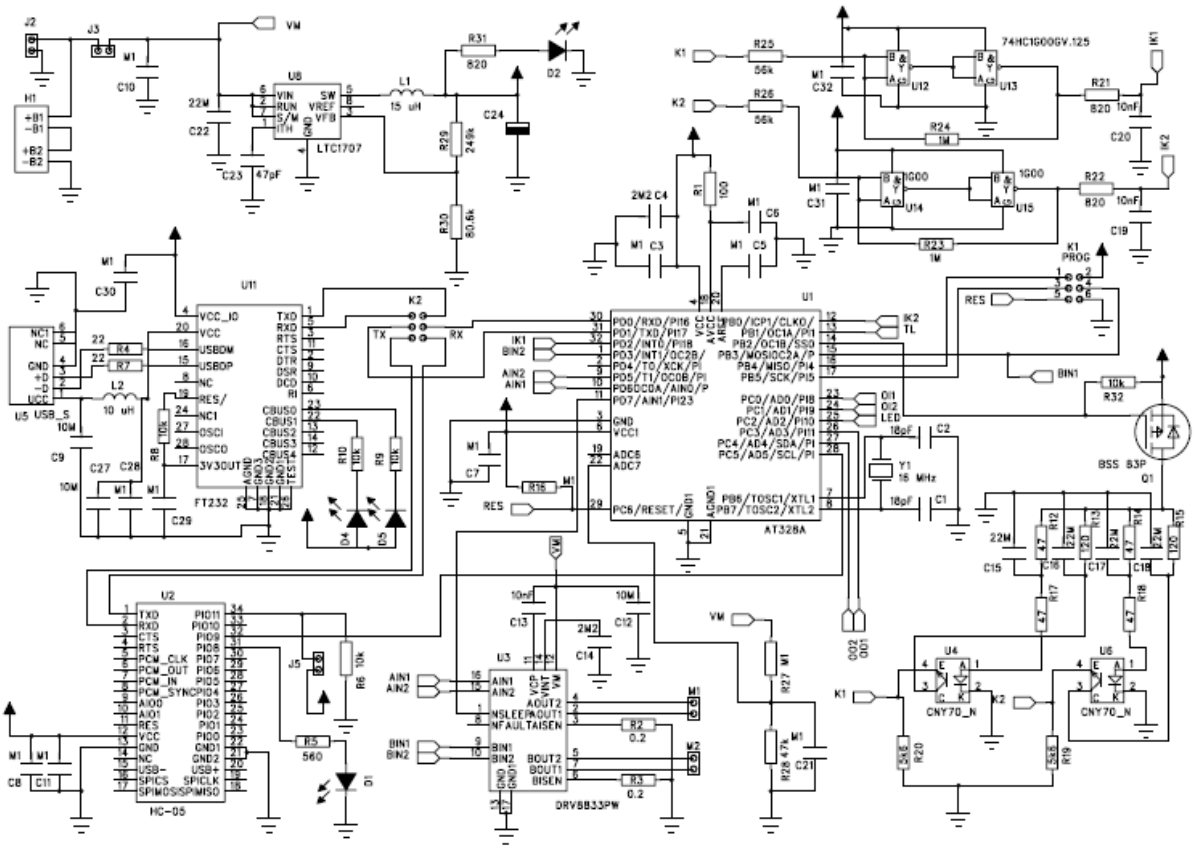

Figure 3. System schematic.

At the present time, following code examples are tuned up to be prepared for the educational purposes:

- send the robot to the defined place, take there a photo and come back.
- control the movement of the robot remotely (over the Internet).
- send the robot to spy somebody (video, audio record) (Figure 4).
- other tasks that can come up through the process of “playing”.

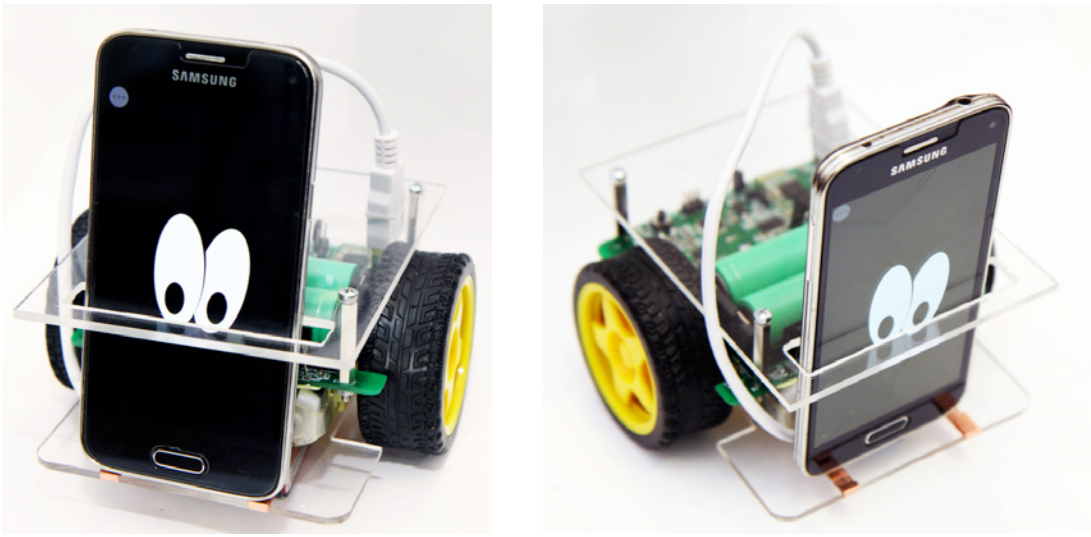

Figure 4. Utilization of the Mobile Platform in practice.

4 CONCLUSION

After the successful testing of the robot by university students, we see the great potential of the robot usage in the educational process. To reach its mass implementation, several tasks have to be performed. The most important is to extend the set of code examples. This could attract other users who could create the community. Creation of a community of users who should create new, interesting solutions is a precondition of a successful adoption of everything. However, the exact way of students' stimulation is still something mysterious.

ACKNOWLEDGEMENT

This teaching aid would not be developed without the support of Volkswagen Slovakia Foundation.

REFERENCES

[1] H. Yoon, "A relation between young children's computer utilization and their use of education robots", 6th International Conference on Human-Robot Interaction (HRI), 2011, ACM/IEEE, 8-11 March 2011, Lausanne, Switzerland.

[2] F. Mondada … [et al.], "Bringing Robotics to Formal Education: The Thymio Open-Source Hardware Robot", IEEE Robotics & Automation Magazine, Volume: 24, Issue: 1, March 2017, pp. 77 - 85, DOI: 10.1109/MRA.2016.2636372

[3] W. Wang, "A mini experiment of offering STEM education to several age groups through the use of robots", Integrated STEM Education Conference (ISEC), 2016, IEEE, 5 March 2016, Princeton, NJ, USA, DOI: 10.1109/ISECon.2016.7457516

[4] M. Hodoň ... [et al.], "Yrobot. Open HW platform for technical disciplines", In book: Global e-learning. - [Madrid: Universidad a distancia de madrid], 2015. - ISBN 978-84-454-2943-3. - pp. 257-274.

[5] M. Kochláň, M. Hodoň, "Open hardware modular educational robotic platform - Yrobot", RAAD 2014: 23rd international Conference on Robotics in Alpe-Adria-Danube Region: September 3-5, 2014 Smolenice Castle, Slovakia. - ISBN 978-80-227-4219-1.

[6] M. Chovanec, L. Čechovič, L. Mandák, "Aeris - robotics laboratory with dynamics environment", In: Robotics in education: research and practices for robotics in STEM education. Part IV. - [S.l.]: Springer, 2016. - ISBN 978-3-319-42974-8. - pp. 169-180.

[7] M. Hodoň, J. Miček and M. Kochláň, "Networking Extension Module for Yrobot - A Modular Educationl Robotic Platform", Advances in intelligent systems and computing, Springer, Vol. 457. - ISSN 2194-5357.

[8] M. Tornow; A. Al-Hamadi and V. Borrmann, "A multi-agent mobile robot system with environment perception and HMI capabilities", International Conference on Signal and Image Processing Applications (ICSIPA), 2013, IEEE, 8-10 Oct. 2013, Melaka, Malaysia, DOI: 10.1109/ICSIPA.2013.6708013