APPLICATION OF REAL-TIME SIMULATION SYSTEM IN THE FRAMEWORK OF DIGITAL SIGNAL PROCESSING PRACTICE-COURSE

A. Sotnikov, A. Proletarsky, V. Suzev, T. Kim

Bauman Moscow State Technical University (RUSSIAN FEDERATION)

Abstract

Methods and algorithms for digital signal processing (DSP) are used everywhere in the modern world. Entertainment, medicine, defence, communications — all of these industries are now actively use DSP in real time mode. The current pace of development of electronic computing technology creates a good potential for further spread of the DSP in our life in the future.

Widespread usage of DSP algorithms and devices are makes the leading technical universities pay enough attention to the quality of courses in this discipline. The most significant indicator of the educational program is the level of students' practical skills.

This article describes the method of DSP learning on example of working with audio signals. This approach allows students to evaluate the results of processing, not only on graphics, but also by ear. Real-time simulation system consists of high-tech DSP target board produced by Texas Instruments and PXI-platform developed by National Instruments. The interaction of these devices ensures the flexibility of the toolkit and provides the depth of practical skills gained by students. The software for the simulation system is developed by authors, but it presented as a reference design for students. Students use the developed reference software in their laboratory work, study the existing code and add missed fragments.

In this paper, the authors describe the methodology of the practical DSP-course, including lesson's plan, description of the hardware and software toolkit in details, simulation signal methods and algorithms, the results of application learning method in high school. The simulation signal methods are developed in the framework of Project #2.7782.2017/BC with financial help of Russian Federal Ministry of Education.

Keywords: digital signal processing, audio signals, reference design, Texas Instruments, National Instruments.

1 INTRODUCTION

Digital Signal Processing (DSP) is one of the most sought-after areas of science. Competences in this area are necessary for specialists from various branches of technology: communication [1,2], medical [3,4], image processing [5,6], physics [7], radar [8], sonar and others.

As a rule, at leading technical universities the course of DSP consists of two parts: theoretical and practical. The main difficulties are to create the methodology of the practical course, because it requires significantly more resources: it is necessary to use special equipment, moreover we need to have perfect time management to provide students improve their skills in very difficult branch of technology for the very short time. Unfortunately, the curriculum does not allow to allocate a lot of time for practice usually.

In this article authors describe the method of DSP learning in practice using high-tech DSP target board TMS320C5515 eZdsp™ USB Stick Development Tool by Texas Instruments. To reduce time of the students' custom software development, authors offer reference design software for quick start for the DSP research. To provide a flexibility of source signals simulation for processing authors developed the simulation toolkit based on PXI-platform by National Instruments. Using this toolkit, students have an unique opportunity to generate different types of signal and process them subsequently on the DSP target board applying the custom software.

The provided methodology of the practice DSP-course implies of processing audio-range signals in real time mode. It allows students to understand and "feel" the signals' durations and frequencies not only by graphic visualization, but also aurally.

The authors teaching experience allows to speak about the success of the method. The students acquire skills of developing custom software for DSP in practice, hardware programming, simulation signals, verifying and validating the results in real-time mode in a short curriculum terms. The results of the students' quantitative survey complete the article.

2 METHODOLOGY

The course program is a logical continuation of the another authors' course program [9]. The main difference from the previous program is that the emphasis is placed on the real time mode while signal processing. This is the reason for the replacement of the Mathworks Simulink models performed on the personal computer (PC) with a special Labview software developed by authors and performed on the National Instruments PXI-platform. This improvement provides the real-time signal simulation. The reference design software for the target board is also produced by authors keeping in mind the real time processing.

The teaching process and the presentation are according to a spiral model. Moving from the lesson to the lesson, the student applies more complex methods using the same tools. According to the Bloom's taxonomy the students evaluate the quality of their theoretical knowledge obtained with their own practical results [10].

To implement the methodology, it is necessary to have some special equipment (toolkit) for each student or group of students:

- Target board TMS320C5515 eZdsp USB Stick by Texas Instruments;
- PXI-platform for real time signals' simulation by National Instruments;
- Personal computer (PC);
- Some special software by authors of the article.

The connection scheme of the toolkit is shown on Fig.1. A more detailed description of the toolkit is given in the next section of the article.

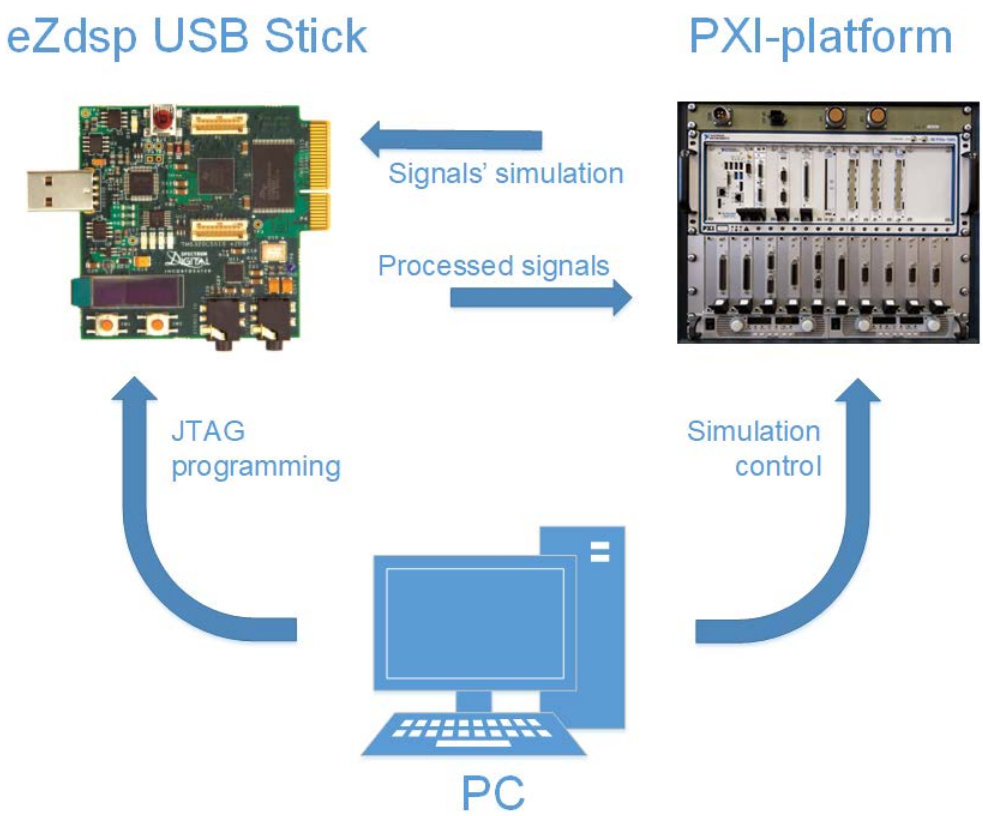

Figure 1. The connection scheme of the toolkit.

Since audio signals were chosen as a source signals, students have a remarkable opportunity not only to observe signals in the graphic form, but also to hear the result of processing. Practice shows that this significantly increases the effectiveness of the course.

The parameters and type of source simulated signals have been selected by authors according to their experience in order to provide students to understand all details of digital signal processing.

The course is designed for 19 academic hours and consists of 10 separate lessons, the table 1 gives brief description of these lessons: name of the lesson, aim and duration. According to the method of training, the course is for a class of 10–12 persons. Students should have basic knowledge in two disciplines for successfully passing the course: “Programming” [11] and “Theory of DSP”. Preliminary training of a teaching staff for the course is carried out according to a special manual for a one week [12].

Table 1. *The program of course.*

Title	Aim	Duration
Module 1 Introduction lessons		
Lesson 1 National Instruments Labview.	Students obtain the beginning skills in National Instruments Labview. During the laboratory work students run reference design software, try to modify parameters according to the manual.	2 hours
Lesson 2 National Instruments PXI-platform.	Students study the structural diagram of the PXI-platform, PXI-modules’ specifications.	2 hours
Lesson 3 Texas Instruments Code Composer Studio.	Students obtain the skills in hardware. They learn launching, updating and debugging example programs.	2 hours
Lesson 4 Texas Instruments board design toolkit on the basis of microprocessor TMS320C5515.	Students study the structural diagram of the toolkit, their basic control and display components using examples of programs, they learnt how to read data from the analog – digital convertors (ADC) and write to the digital – analog convertor (DAC).	2 hours
Module 2. The practice course of DSP		
Lesson 5 Linear discrete systems.	Using programs offered by the authors, students study the passage of various signals through a series of digital filters with different characteristics.	2 hours
Lesson 6 Real time mode systems.	Using programs offered by the authors, students study the real time mode systems.	2 hours
Lesson 7 Signals’ simulation in National Instruments Labview.	Students study signal’s simulation methods and algorithms in the spectral domain using Fourier and Hartley basis functions. They obtain advanced skills in the National Instruments Labview environment.	2 hours
Module 3. Digital filters		
Lesson 8 Calculation of a digital filter using Matlab Fvtool	Calculation of the amplitude-frequency characteristic coefficients of the filter using the Mathwork Fvtool environment, the phase-frequency characteristic, the impulse response and the “zeros” of the obtained filter.	2 hours
Lesson 9 Implementation of the digital filter on the TMS320C5515	Software implementation of the digital filter using the received impulse response samples as a separate function in the program for the TMS320C5515 eZdsp USB Stick operating in real time.	2 hours
Lesson 10 Discussion	Discussion of the results of the work done, their comparison with the theoretical foundations of the DSP-course. Feedbacks.	1 hours

Note: all the example programs underlined in the table 1 have been designed, produced and implemented by the paper co-authors A. Sotnikov and T. Kim.

3 THE INSTRUMENTAL STAND DESCRIPTION

3.1 The target board description

The TMS320C5515 eZdsp USB Stick Development Tool, shown on Fig.2, was selected as an inexpensive and high-quality device for digital signal processing. It is based on a digital signal processor with a fixed point Texas Instruments TMS320C5515, which provides 240 MIPS, 320 KB of RAM and hardware accelerator FFT. The LINE IN audio output and the audio output at the headphone / line level (LINE OUT) are provided by the TLV320AIC3204 stereo codec. Analog-to-digital converters of the codec (ADC) have a signal-to-noise ratio (SNR) of 93 dB, digital-to-analog converters (DACs) have a SNR of 100 dB, and a maximum sampling rate of 192 kHz [9].

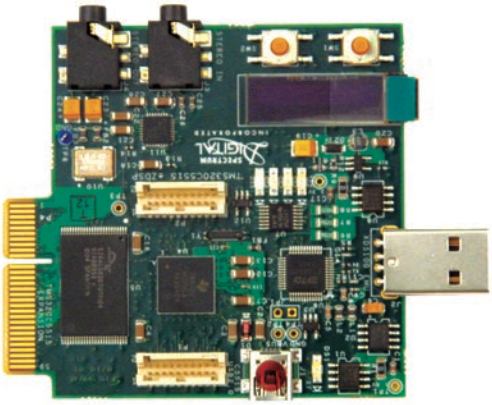

Figure 2. The target board TMS320C5515 eZdsp USB Stick.

Two pushbuttons Button 1 and Button 2 allow to make the results of DSP demonstration more functional and convenient. The Button 1 is used to select the type of a filter, and the Button 2 — to select a predefined set of parameters for the selected filter's type on the built-in OLED display of 96x16 pixels. It can display two lines up to 19 characters in length, as well as a simple graph and five LEDs, which can be used to provide feedbacks to the students. One of the menu items is for filter parameters' selection. The screen of the TMS320C5515 eZdsp USB Stick after power-up is shown on Fig.3.

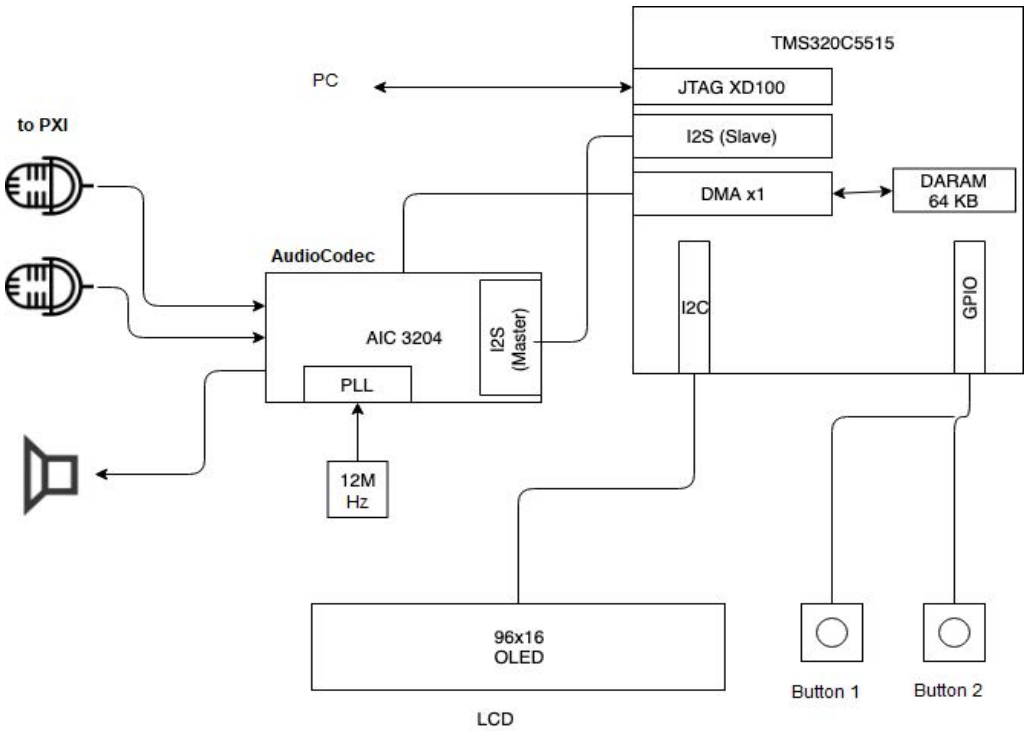

Figure 3. The structural diagram of the target board TMS320C5515 eZdsp USB Stick.

3.2 The simulation device description

Experiments with real-time signal processing imply the provision of the original signals' simulation also in real-time. It forms a requirement for signals' simulation equipment. The main requirements are:

- high performance;
- modularity and extensibility;
- software flexibility;
- quick start simulation.

These requirements are well met by the PXI (PCI eXtensions for Instrumentation) standard [13], which is designed to create automated measuring and testing systems. In general, the architecture of the PXI includes a set of components:

- PXI chassis combines peripheral modules, controllers and interfaces for remote platform management;
- PXI controller, which allows control PXI-system by a PC;
- PXI peripheral modules are necessary for the collection, generation, routing of signals and measurements.

The authors chose a set of PXI peripheral modules by National Instruments to provide students generate and analyze different types of source signals using the toolkit. The simulation toolkit based on PXI-platform is shown on Fig.4.

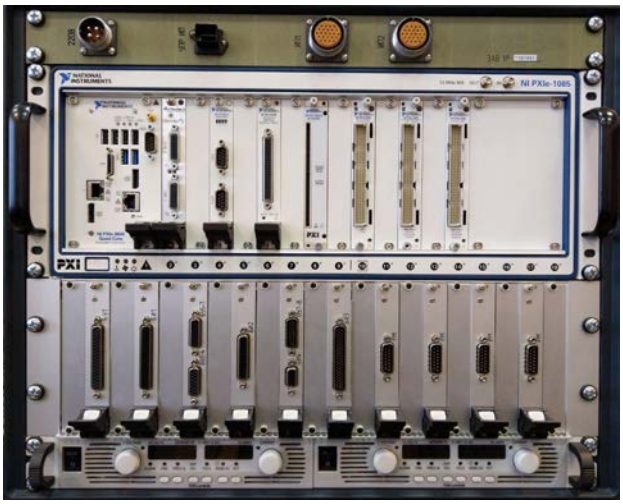

Figure 4. The simulation toolkit based on PXI-platform.

One of the main advantages of the PXI platform is the ability to independently determine the user software architecture. Users can use both ready-made software supplied with PXI modular devices or create their own applications in intuitive graphic LabVIEW code or other programming languages. A wide range of ready-made libraries and functions are supplied by National Instruments.

3.3 The software description

The main function of the signal's simulation software is to provide students easy way to form different types of signals to validate the developed algorithm of digital signal processing and verify the embedded custom software, realized on the target board TMS320C5515 eZdsp USB Stick. An effective validation and verification of the real-time system is possible only in case, when the input signals are coming in real-time mode also. That is why the authors placed the emphasis on the timings of signals' simulation process and optimal use of hardware performance while developing the software.

The software simulates deterministic signals, random noises and their linear combinations. It is possible to simulate both wideband and narrowband noises. Wideband noise can have normal Gaussian and uniform distributions. Narrowband noises are implemented using the method of spectral synthesis [14,15]. The software implements spectral analysis of the simulated signals and the signal-to-noise ratio control.

Deterministic signals are:

- tone signal with a fixed single frequency;
- signal with linear frequency modulation (chirp);
- melody recorded in an audio file on the computer;
- amplitude-manipulated signal;
- frequency-manipulated signal;
- phase-manipulated signal;
- signal from the microphone.

The Fig. 5 and Fig. 6 show the chirp signal and its spectrum. The Fig. 7 shows Labview code implementing the above signal.

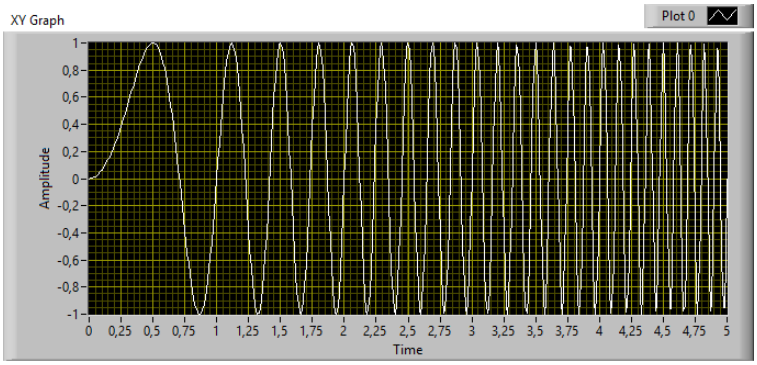

Figure 5. Chirp signal in time domain.

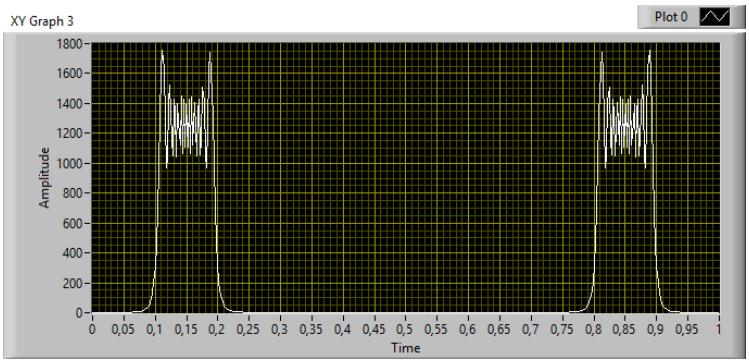

Figure 6. Chirp signal's spectrum.

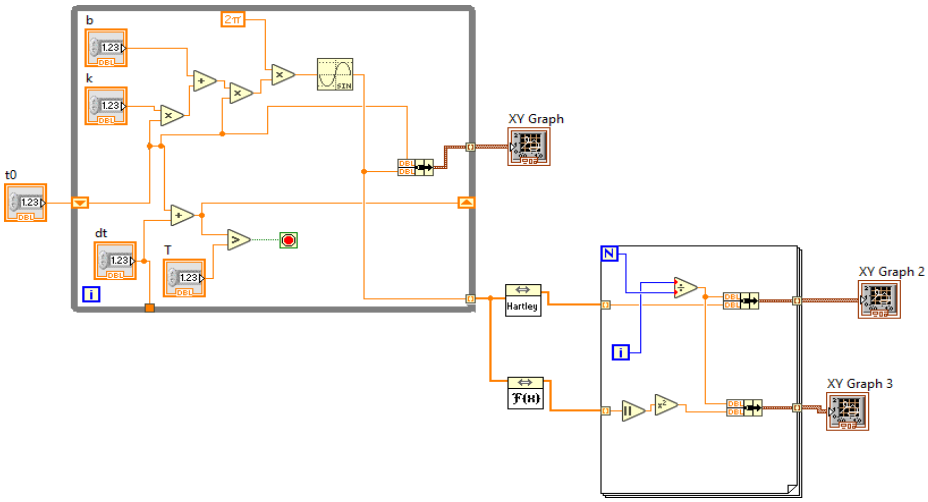

Figure 7. Labview code implementing the chirp signal.

4 RESULTS

The methodology was tested on a focus-group consists of 10 students. These students are master's degree students of the first year education at the Bauman Moscow State Technical University. The students have sufficient competence in disciplines "Programming", "Theory of digital signal processing".

The students have been formed the following competencies during the educational process:

- the ability to configure and adjust of software and hardware systems (C1);
- the ability to create software for DSP systems (C2);
- the ability to apply DSP algorithms on practice (C3);
- the ability to validate the DSP real-time systems (C4).

At the end of the course, students were asked to pass a survey in order to assess the quality of the course. The assessment of students was done by the automated WebPA system [16]. The usage of this environment allows to assess the quality of the course.

The students were asked to rate on a 5-point scale as far as this course allowed to develop the competencies outlined above. Also, the students evaluated the quality of each other student's work. The teacher also made his assessment. The final estimation was formed as the average value between the delivered estimates. The results of the survey are shown in the Table 2.

Table 2. *The assessment of the quality of the course done by students.*

Student	C1	C2	C3	C4	Average score
Student 1	4,33	5	4,89	4,65	4,63
Student 2	5	4,56	4,78	4,78	4,8
Student 3	4,56	4,33	4,67	5	4,78
Student 4	5	4,67	5	4,89	4,92
Student 5	4,78	4,33	4,89	4,78	4,72
Student 6	4,56	5	5	4,78	4,75
Student 7	4,44	5	4,78	4,44	4,51
Student 8	4,89	4,44	4,89	5	4,83
Student 9	4,44	5	4,78	4,44	4,51
Student 10	4,89	4,44	4,89	5	4,83

5 CONCLUSIONS

The enhanced methodology described in the article increased the range of competencies obtained by students in the course learning process. The ability to validate the DSP real-time systems is a very important competence for the practical course of signal processing, because the most of DSP systems are real-time systems. Actually, prior to the implementation of real-time signal simulation, competences "the ability to create software for DSP systems" and "the ability to apply DSP algorithms on practice" were not fully developed in the framework of the course. Real-time simulation was provided by the toolkit developed by authors. The toolkit consists of PXI-platform with Labview code and the target board TMS320C5515 eZdsp USB Stick with reference design for custom students' programs. It provides students try a proper real-time DSP-algorithm and embedded custom software, perceive the results of by hearing and vision. Besides the high performance, the new simulation platform meets the requirements of modularity and extensibility. This provides the possibility for further expanding the functionality of both through hardware additions or software upgrades.

The described methodology gives rich learning materials for the students' experimental work, develops their practice skills up to the scientific research. It is very important and actual for highly skilled engineers. The first year master students' feedback confirms the efficiency of the methodology.

ACKNOWLEDGEMENTS

The described work has been financially supported by the Ministry of Education and Science of the Russian Federation, Government Contract #2.7782.2017/BC.

The authors are grateful to the company Scanti — an authorized distributor of Texas Instruments in Russia (http://www.scanti.com/index.php/en), for the equipment provided for this course.

The authors are grateful to the Russian representative office of the National Instruments for valuable recommendations on modules selection and profound technical support.

REFERENCES

[1] K.S. Kalashnikov, B.I. Shakhtarin, "Adaptive Kalman filter designed for channel parameter estimation under OFDM-signal reception", Journal of Communications Technology and Electronics, 59 (4), pp. 302–309, 2014. DOI: 10.1134/S1064226914040056.

[2] V. A. Ivanov, D. V. Ivanov, A. A. Elsukov, V. V. Ovchinnikov, N. V. Ryabova and M. I. Ryabova, "BPSK signal shaping and processing for digital SDR ionosonde," 2018 Systems of Signals Generating and Processing in the Field of on Board Communications, Moscow, pp. 1–5, 2018. DOI: 10.1109/SOSG.2018.8350595.

[3] Y. Gorshkov, "Visualization of the heart sounds", Scientific Visualization, 9 (1), pp. 97–111, 2017.

[4] M.A. Basarab, N.S. Konnova, D.A. Basarab and D.D. Matsievskiy, "Digital signal processing of the Doppler blood flow meter using the methods of nonlinear dynamics," 2017 Progress In Electromagnetics Research Symposium – Spring (PIERS), St. Petersburg, pp. 1715–1720, 2017. DOI: 10.1109/PIERS.2017.8262026.

[5] V.F. Kravchenko, V.I. Ponomaryov, V.I. Pustovoit, A. Palacios-Enriquez, "Complex noise suppression using a sparse representation and 3D filtering of images", Doklady Physics, 62 (8), pp. 379-383, 2017. DOI: 10.1109/MSMW.2001.946809.

[6] P. Minin, Y. Shumilov, "Sharpness estimation in facial images by spectrum approximation", Signal, Image and Video Processing, 11 (1), pp. 163–170, 2017. DOI: 10.1007/s11760-016-0915-4.

[7] V. Korchagova, M. Kraposhin, I. Marchevsky, E. Smirnova, "Simulation of droplet impact onto a deep pool for large Froude numbers in different open-source codes". Journal of Physics: Journal of Physics: Conference Series, Volume 918, conference 1, 2017. DOI: 10.1088/1742-6596/918/1/012037.

[8] Labunets, L.V., "Automatic intellectual signal processing in subsurface radar systems", Journal of Communications Technology and Electronics, 60 (4), pp. 362–374, 2015. DOI: 10.1134/S1064226915030122.

[9] A. Sotnikov, V. Syuzev, E. Smirnova, T. Kim, "Real-time toolkit's usage for research and educational tasks on digital signal synthesis, processing and analysis course", EDULEARN18 Proceedings, pp. 4711–4720, 2018. DOI: 10.21125/edulearn.2018.

[10] "Bloom's taxonomy", Wikipedia, The Free Encyclopedia, Accessed 14 April, 2019. Retrieved from URL: https://en.wikipedia.org/wiki/Bloom%27s_taxonomy.

[11] E. Smirnova, R. Samarev, P. Willmot, "New technology for programming teaching: process mining usage", EDULEARN15 Proceedings, pp. 7330–7335, 2018.

[12] E. Smirnova, N. Vatolkina, "Teacher training in engineering education: search for new pedagogical approaches", INTED2018 Proceedings, pp. 6240–6247, 2018.

[13] A. Sotnikov, V. Syuzev, E. Smirnova, T. Kim, "Educational PXI-platform for researching of control systems, digital signal processing and simulation modeling", ICERI2018 Proceedings, pp. 5303–5312, 2018.

[14] V. Syuzev, E. Smirnova, V. Gurenko, B. Buchkov, A. Lepkivker, "Software for signals simulation algorithms' implementations as a new form of student's research in the field of engineers preparation", INTED2018 Proceedings, pp. 4114–4123, 2018.

[15] E. Smirnova, V. Suzev, A. Proletarsky, V. Gurenko, "Signal's simulation methodologies used in scientific and educational tasks of real-time information system's modelling", INTED2017 Proceedings, pp. 9140-9143, 2017.

[16] T.A.Kim, "The method of cross-checking the competences of students using the WebPA site as an example", Molodeznii nauchno-technicheskii vestnik: Scientific Publication. 2016 (5); (In Russian). Retrieved from URL: http://sntbul.bmstu.ru/doc/839468.html (Access date 18.09.2018).